Unit 2,
Delta Court,
Doncaster,
DN9 3GN
text_phone 03333 444 943
sales@theledstore.co | https://theledstore.co/

LED Strip / LED Tape by the Metre Cut to Size Per Metre / 1m - 20W/m Single Colour flexible LED strip Lights custom cut to size SMD2835

£17.40





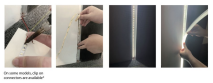

PRODUCT INFORMATION

LED Type	SMD 2835
Warranty	3 Year Warranty
Part L Compliant	No
Dimensions	1m x 10mm
Weight	0.087kg

TECHNICAL SPECIFICATIONS

Power Consumption	20W/m
Input Voltage	24V DC
Operating Temperature	-20°C to 50°C
Ingress Protection	IP21 / IP65

LUMEN PERFORMANCE

Beam Angle	120˚
LED Quantity	240LED/m

AVAILABLE OPTIONS

Unit 2,
Delta Court,
Doncaster,
DN9 3GN
text_phone 03333 444 943
sales@theledstore.co | https://theledstore.co/

PRODUCT INFORMATION

TECHNICAL SPECIFICATIONS

LUMEN PERFORMANCE

AVAILABLE OPTIONS

Colour Temperature	Warm White 2700K-3000K Natural White 4000K-4500K Cool White 6500-7000K
3-Hour Emergency Version	No
Built-in Microwave Occupancy Detector	No
1-10V Dimmable	With Compatible Driver
DALI Dimmable	With Compatible Driver
DMX 512 Compatible	Yes (via External DMX Decoder)

PLEASE NOTE LED STRIP IS EXTREMELY FRAGILE AND REQUIRES PROFESSIONAL INSTALLATION. PRODUCT SHOULD BE ORDERED/INSTALLED BY A QUALIFIED ELECTRIAN EXPERIENCED WITH LED STRIP/LOW VOLTAGE SYSTEMS.

THIS PRODUCT IS CUSTOM CUT TO SIZE, THE PRODUCTION TIME IS 4-5 WORKING DAYS

Click here to order the full stock 5m roll of LED Tape /LED Strip 24V DC

Order LED Strip by the metre, custom cut to length to the nearest 1m complete with pre-soldered cable for simple installation straight to your power supply or controller + specify the length of cable required from 1m to 10m. LED Strip is cut to the nearest metre ie. if you require 3.7m, select 4m, you can then simply cut with a pair of scissors to the desired length on site as the LED tape has cut points every 25mm intervals depending on the type. You can also specify the length of the cable size from 1 - 10m. If you require multiple cuts, add each to cart individually & remember to check the cart before placing the order as once into production your order CANNOT be changed. **Please note – once custom cut, the items are non refundable.**

DOWNLOAD LED STRIP LIGHT LED TAPE LIGHT INSTRUCTIONS - HOW TO INSTALL LED STRIP GUIDE / MANUAL

Unit 2,
Delta Court,
Doncaster,
DN9 3GN
text phone 03333 444 943

Power Strip from Single end - MAX 5M Sections of LED to avoid Voltage Drop

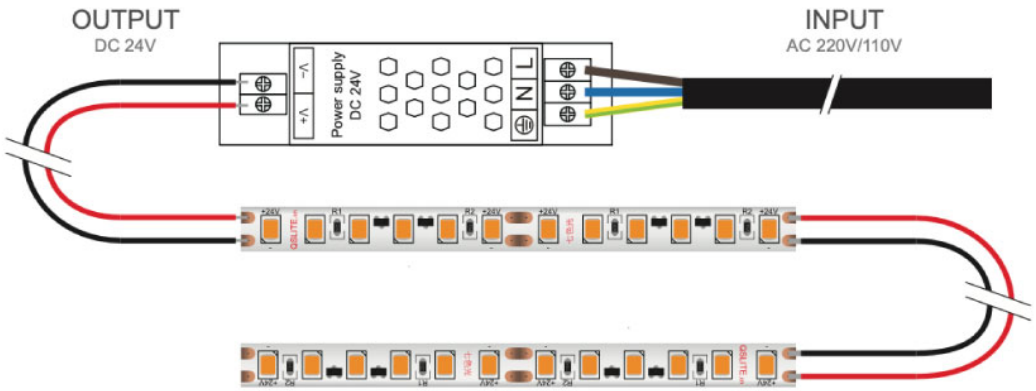

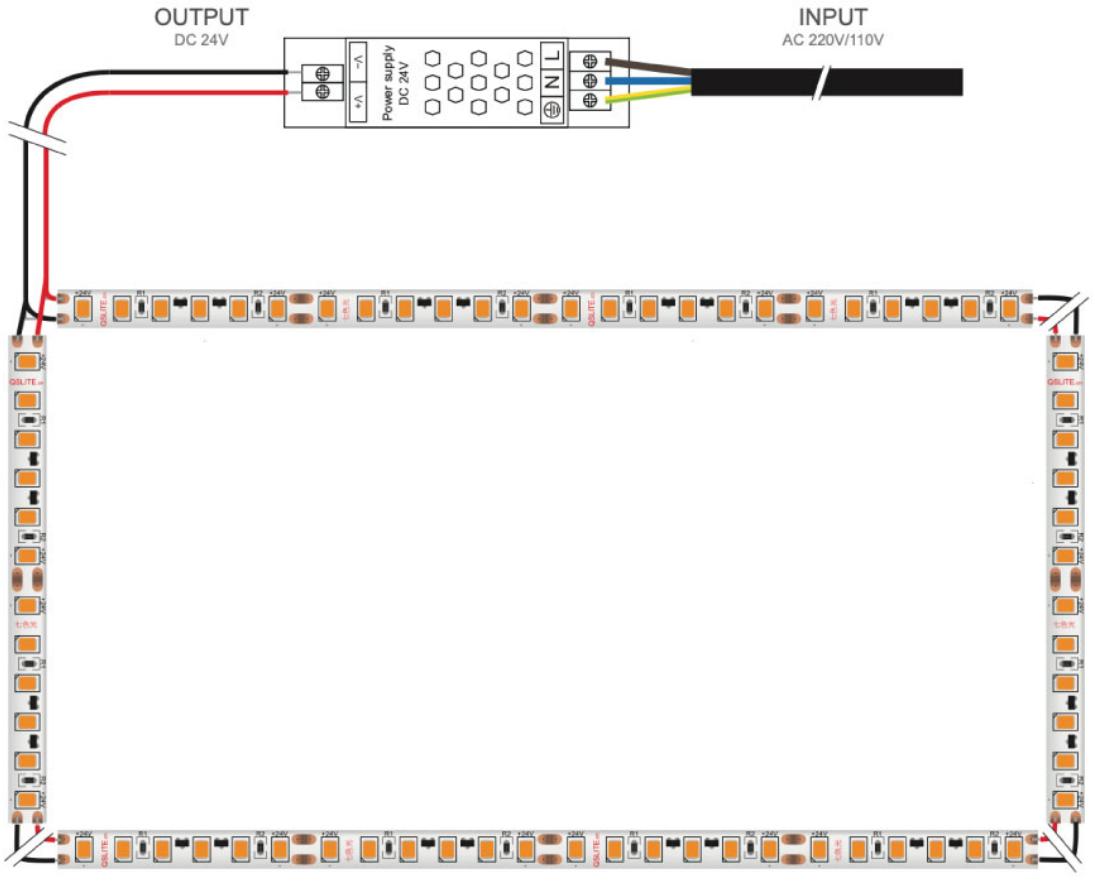

Unit 2,
Delta Court,
Doncaster,
DN9 3GN
text phone 03333 444 943

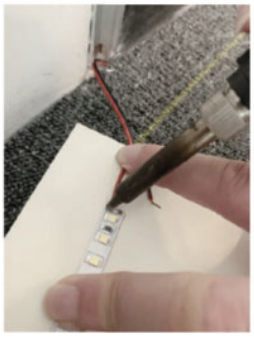


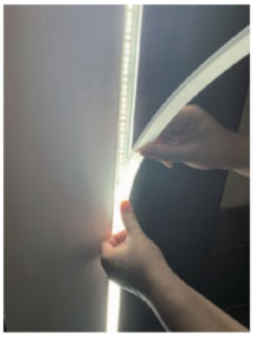

On some models, clip on connectors are available*

DRIVER SELECTION GUIDE

Total Length of Strip (m)	Total Load (Watts)	Driver Size (Watts)*
1m	20W	30W
2m	40W	60W
3m	60W	100W
4m	80W	100W
5m	100W	150W
8m	160W	360W
10m	200W	360W
12m	240W	360W
15m	300W	360W

Do you offer a 'cut-to-size' service?
Yes, see above options for adding on custom length cut to the nearest m ie. if you require 3.7m, select 4m, you can then simply cut to the desired length on site with a pair of scissors as the LED tape is cuttable every 5-10cm depending on the type. You can also specify the length of the cable size known as 'tails'; from 1 - 10m. If you require multiple cuts, add each to cart individually. ***Please note – once custom cut, the items are non refundable.***

Does the LED Tape come with Aluminium Profile?
We sell each item individually, so this product page is for the led tape/led strip only. Check out relate products below for our range of aluminium led profile *here.*

Can I cut the aluminium LED tape?
Yes, it can be cut with a pair of scissors or electrical cutters at specified points.

Do you have corner pieces/how do I go around corners?
We don't do corner pieces for our LED Strip. For going around 90˚ corners, you would need to cut and solder a cable connection join or use a led strip connector. NOTE - LED strip connectors may not fit in all LED profiles please check prior to ordering.

Do you have joining pieces/ how do I join LED aluminium profile?
We don't do joining pieces for any of our led strip as generally it shouldn't be installed in single runs longer than 10m due to voltage drop to obtain a continuous appearance.If you do have to join a section or 2 off-cuts, you would need to cut and solder a cable connection join or use a led strip connector. NOTE - LED strip connectors may not fit in all LED profiles please check prior to ordering.

What colours is the LED Strip available in?
As standard, we stock 3 whites:
- Warm White 2700-3000K
- Natural White - 4000K

Unit 2,
Delta Court,
Doncaster,
DN9 3GN
text_phone 03333 444 943
sales@theledstore.co | https://theledstore.co/

- Cool white - 6500-7000K
And RGBW colour changing which with the correct LED controller from us can be changed through 16 million different variations of colour.

What lengths does LED strip come in?
We typically stock all of our LED Strip in 5m rolls as by the m/cut to size.

Is this waterproof? Can it be used outdoors or in bathrooms?
The LED strip itself is available in IP21 non-waterproof & IP65, waterproof / outdoor use. If outdoor or in wet locations, you would need to use suitable waterproof IP rated LED tape with your installation denoted IP65/waterproof.

How do I stop the LEDS spotting/dot effect?
When it comes to that spotty/dotty LED effect, people often think a diffuser will solve this outright. Unfortunately that is not true and depends using a quality LED strip with sufficient number of LEDS per m such as our continuous spotless / non spotting LED Strip such as this one no spotting / no dotting spotless LED strip / LED tape light

What size LED tape / LED strip fits in our LED aluminium profiles?
All of our range of LED strip/led tape fits in any of our profile, so rest assured when buying both LED tape and LED profile from us, your products are compatible.